HSF

NOTES:
1.Current Rating:15A (16,14AWG); A1
2.Contact Resistance: 10mΩ Max;
3.Operating Temperature: −55℃ to +105℃;
4.Contact Material:Copper Alloy;
5.Contact plating:
SN:100μ" Tin over 50μ"Nickel.
SX:xxμ" Gold on contact area (See ordering information),
50μ" Nickel underplating overall;
6.Wire Range:16−14AWG;
7.Insulation OD range:ø2.2−2.8mm;

Ordering Information

WD3810-MT D4 14 XX 01

- MT=Tab Contact
- Material
- Wire Range: 14=16~14AWG
- Contact Plated: SN=TIN, S1=3u" Au/Ni, S4=15u" Au/Ni, S5=30u" Au/Ni
- wcon Internal Code

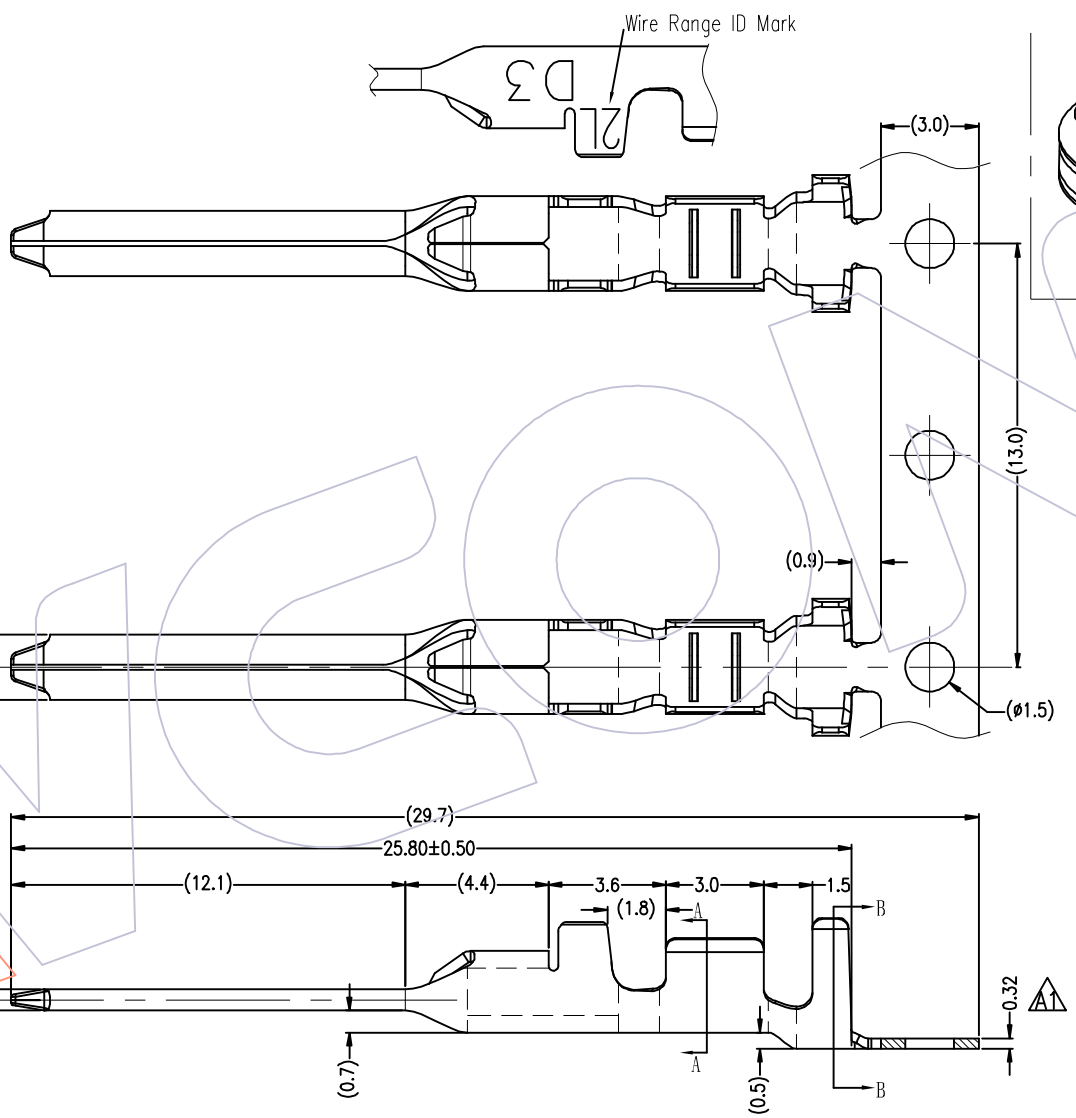

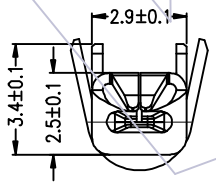

SCHEMATIC DIAGRAM OF TERMINAL DISCHARGE

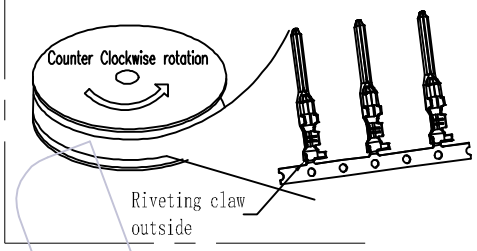

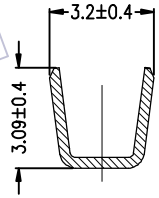

A−A

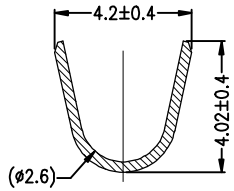

B−B

REV	DATE	MODIFICATION DESCRIPTION	CHANGE
A1	2024.03.07	Add wire current rating,Add dimensions	OHJ
A0	2022.03.15	NEW	Houfu Peng

OPERATION	
X.X	±0.30
X.XX	±0.25
X.XXX	±0.2
Angle	± 3°
DIM	TOL

DRAW OHJ	DATE 2024.03.07	SCALE	FIT
CHECK	DATE	UNIT	mm
APPROVE	DATE	SIZE	A4
		SHEET	1/1
		PROJ.	

PART NO. WD3810−MTD414XX01

TITLE: 3.81mm Tab Contact (Wire Range ID Mark: 2L)

Customer NO.

WCON
Http: www.wcon.com

WCON−Dongguan
Tel: +86 769 85358920
Fax: +86 769 85358915
E-mail: sales@wcon.com

WCON−Kunshan
Tel: +86 512 57468408
Fax: +86 512 57468468
E-mail: salesks@wcon.com