HSF

NOTES:
Current Rating: 1.0A AC,DC(AWG#26)
Voltage Rating: 50V AC,DC
Contact Resistance: 30mΩ Max.
Withstand Voltage: 500V AC/Minute
Insulation Resistance: 100MΩ Min.
Operation Temperature: −40℃ to +105℃

Crimp Terminal Material: Phosphor Bronze
Selected Gold Over Nickel
Wire Range: AWG#26−#32
Insulation O.D.: 1.0mm Max.

Ordering Information

WF1256 - T P1 XX 0X

Material:
P1=Phosphor Bronze
Plating:
S0=1u"Gold/Ni
S1=3u"Gold/Ni
WCON Internal Code

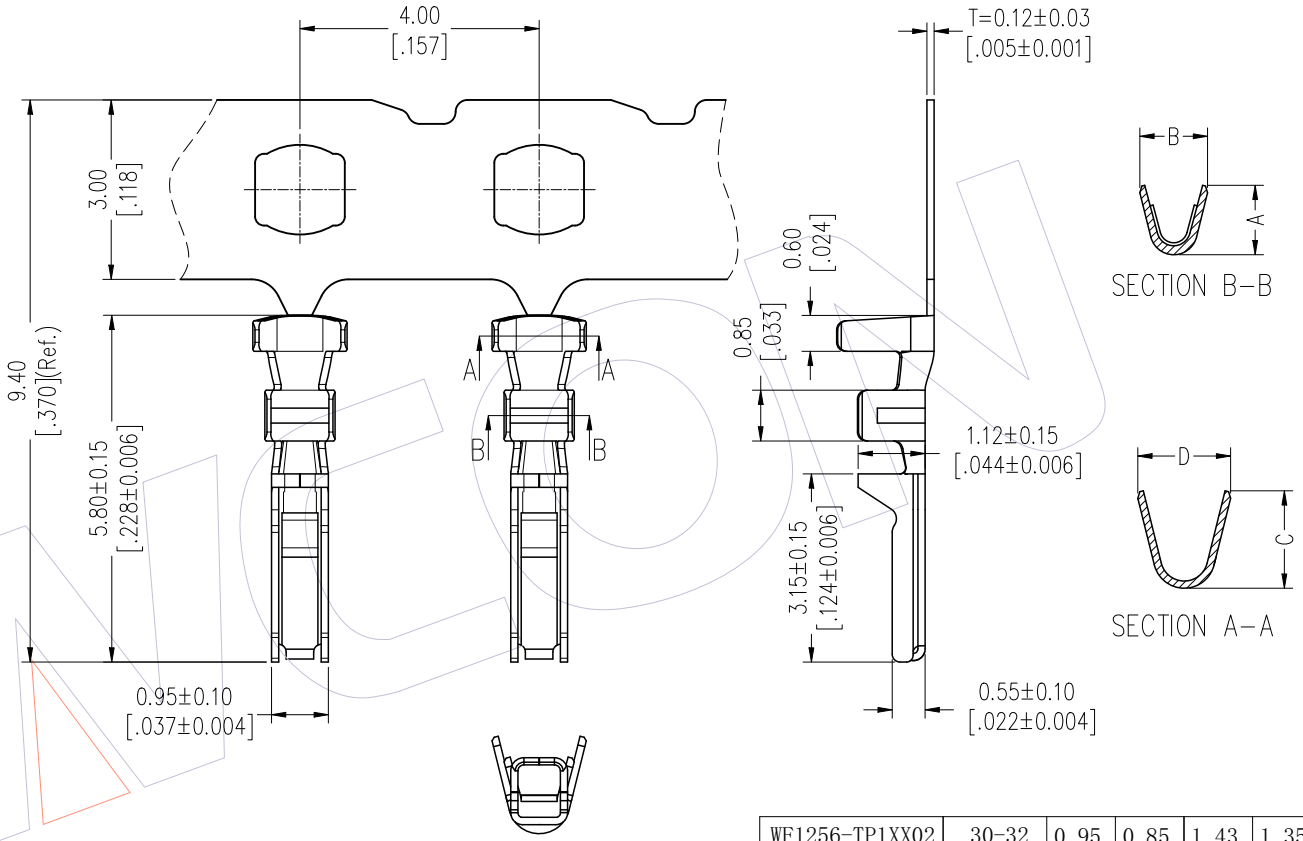

WF1256-TP1XX02	30-32	0.95	0.85	1.43	1.35
WF1256-TP1XX03	26-28	1.16	1.13	1.63	1.55
PART NO.	Applicable (AWG#)	A	B	C	D
		DIM			

REV	DATE	MODIFICATION DESCRIPTION	CHANGE
A0	2020.11.23	NEW	------

OPERATION	
X.X	±0.40
X.XX	±0.25
X.XXX	±0.15
Angle	± 3°
DIM	TOL

DRAW	ZHLL	DATE	2020.11.23
CHECK		DATE	
APPROVE		DATE	

SCALE	FIT
UNIT	mm [inch]
SIZE	A4
SHEET	1/1
PROJ.	

PART NO. WF1256−TP1XX0X

TITLE: 1.25mm Pitch Wafer Crimp Terminal(Dual Row)

Customer NO.

WCON
Http: www.wcon.com

WCON−Dongguan
Tel: +86 769 85358920
Fax: +86 769 85358915
E-mail: sales@wcon.com

WCON−Kunshan
Tel: +86 512 57468408
Fax: +86 512 57468468
E-mail: salesks@wcon.com