HSF

NOTES:
Current Rating:2.0AMP
Contact Resistance:30mΩ Max
Withstand Voltage:800V AC/DC
Insulation Resistance:1000MΩ Min
Operation Temperature:-40℃ to +105℃

Contact Material:Brass
Contact plating:Au Or Sn over Ni
Insulator Material:PBT(W/O G.F) UL94V-0

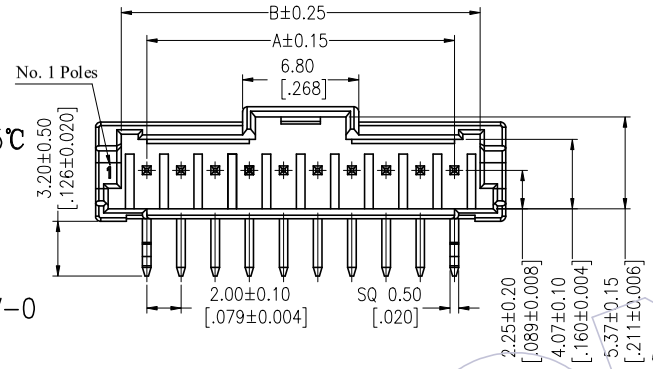

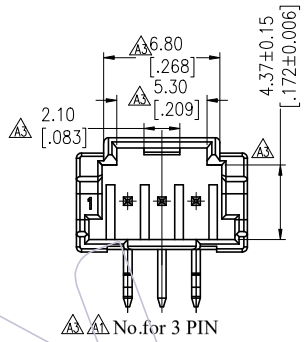

Recommended P.C.B Layout(Top Side)
(PCB BOARD TOLERANCE±0.05)

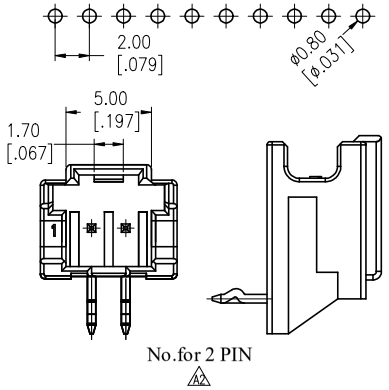

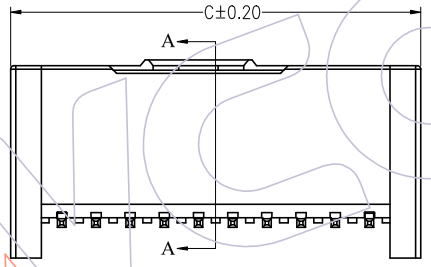

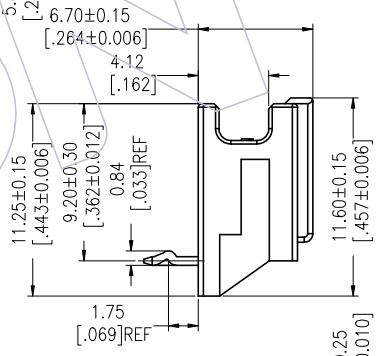

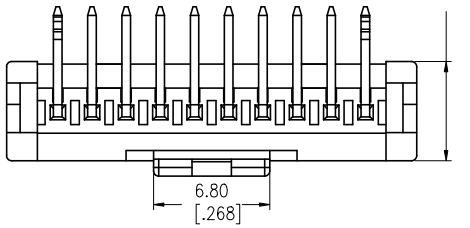

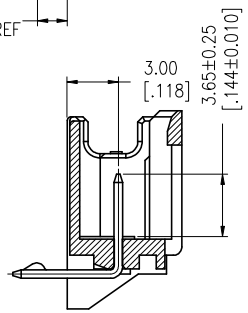

Section "A-A"

Ordering Information

WF2007 - WR XX W 0 1

- No.of pins: 02~15P
- Contact Plating: S0=Gold Flash/Tin, S3=10u"Gold/Tin, S4=15u"Gold/Tin, S5=30u"Gold/Tin, G0=Gold Flash, G3=10u"Gold, G4=15u"Gold, G5=30u"Gold, Blank=Tin
- Color: B=Black, W=White
- Packing: 0=PE Bag

Specification & Ordering Information:

Circuit	Part No.	Dimension			Q'ty /Bag
		A	B	C	
02	WF2007-WR02W01	2.0	5.0	8.0	1,000
03	WF2007-WR03W01	4.0	7.0	10.0	1,000
04	WF2007-WR04W01	6.0	9.0	12.0	500
05	WF2007-WR05W01	8.0	11.0	14.0	500
06	WF2007-WR06W01	10.0	13.0	16.0	400
07	WF2007-WR07W01	12.0	15.0	18.0	400
08	WF2007-WR08W01	14.0	17.0	20.0	400
09	WF2007-WR09W01	16.0	19.0	22.0	250
10	WF2007-WR10W01	18.0	21.0	24.0	250
11	WF2007-WR11W01	20.0	23.0	26.0	250
12	WF2007-WR12W01	22.0	25.0	28.0	250
13	WF2007-WR13W01	24.0	27.0	30.0	200
14	WF2007-WR14W01	26.0	29.0	32.0	200
15	WF2007-WR15W01	28.0	31.0	34.0	200

REV	DATE	MODIFICATION DESCRIPTION	CHANGE
A3	2023/05/08	Change 3P Product Structure	PAN
A2	2022/05/20	Update Drawing	GH
A1	2021/11/30	ADD 3pin	WJH
A0	2012/09/05	NEW	——

OPERATION	
X.X	±0.40
X.XX	±0.25
X.XXX	±0.15
Angle	± 3°
DIM	TOL

DRAW PAN	DATE 2023/05/08	SCALE	FIT
CHECK	DATE	UNIT	mm inch
APPROVE	DATE	SIZE	A4
		SHEET	1/1
		PROJ.	

PART NO. SEE TAB

TITLE: "M"TYPE 2.0 Wafer 90° DIP

Customer NO.

WCON
Http: www.wcon.com

WCON-Dongguan
Tel: +86 769 85358920
Fax: +86 769 85358915
E-mail: sales@wcon.com

WCON-Kunshan
Tel: +86 512 57468408
Fax: +86 512 57468468
E-mail: salesks@wcon.com