HSF

TECHNICAL SPECS:
Current Rating:3.0AMP
Contact Resistance:10mΩ Max
Dielectric Strength: Min 1000VRMS
Mechanical Life: Min 500 cycles
Mating Pin:ø0.40 to ø0.56mm
Forces: (polished steel gauge ø0.47mm)
Insertion:200g Max/Pin,Withdrawal:60g Min/Pin
Operation Temperature:-40°C to +105°C

Sleeve:Brass CuZn36Pb3(C36000)
Contact Clip(4 finger):BeCu(C17200)
Insulator Material:PPS+30%G.F(UL94V-0)

Ordering Information

3520-301 XX S XX 083 X 1

- No. of Pin: 2~50PIN
- Contact Plating: S0=Gold Flash/Tin, S3=10u"Gold/Tin, S4=15u"Gold/Tin, S5=30u"Gold/Tin, SN=Tin
- Packing: A=Tray, T=Tube

Recommended P.C.B Layout(Top Side)
(PCB BOARD TOLERANCE±0.05)

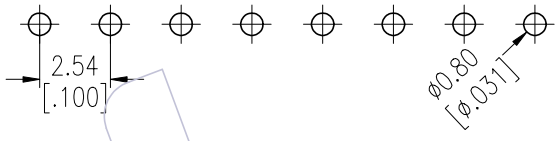

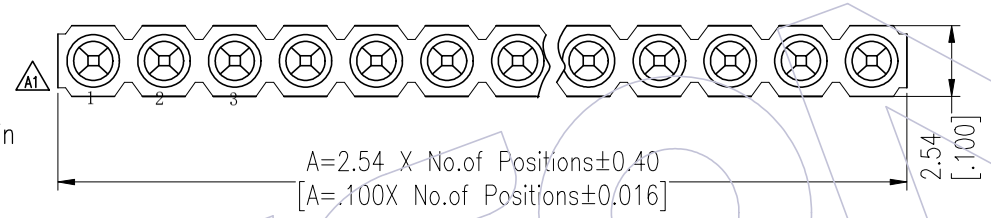

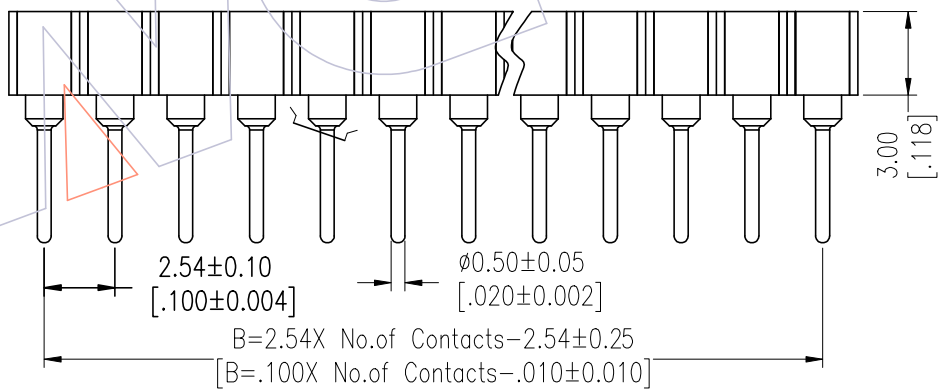

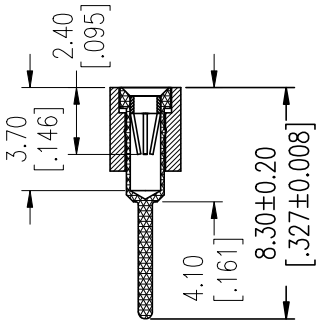

Item	Pitch	Mating
Standard	2.54	3510
Alternate		

REV	DATE	MODIFICATION DESCRIPTION	CHANGE
A1	2024/03/20	Modify Drawing	------
A0	2012/10/18	NEW	------

OPERATION	
X.X	±0.40
X.XX	±0.25
X.XXX	±0.15
Angle	± 3°
DIM	TOL

DRAW	CP	DATE	2024/03/20
CHECK		DATE	
APPROVE		DATE	

SCALE	FIT
UNIT	mm
SIZE	A4
SHEET	1/1
PROJ.	

PART NO. 3520-301XXSXX083X1

TITLE: 2.54mm MACHINED FEMALE HEADER SINGLE ROW 180° H=3.00 L=8.3

Customer NO.

WCON
Http: www.wcon.com

WCON-Dongguan
Tel: +86 769 85358920
Fax: +86 769 85358915
E-mail: sales@wcon.com

WCON-Kunshan
Tel: +86 512 57468408
Fax: +86 512 57468468
E-mail: salesks@wcon.com